**Bobby Jindal**
GOVERNOR

**Kathy H. Kliebert**
SECRETARY

# State of Louisiana

Department of Health and Hospitals
Office of Public Health

Date: Friday, October 03, 2014

To: Sentinel Laboratories

From: Stephen J. Martin, Ph.D.
Director of Laboratory Services

RE: Guidance for Clinical Laboratories for Specimen Collection, Transport, Testing and Submission for Patients with Suspected Infection with Ebola Virus Disease

Ebola Virus Disease (EVD) is one of numerous viral hemorrhagic fevers (VHF). It is a severe, often fatal disease in human and nonhuman primates. Ebola virus is spread by direct contact with the blood or body fluids (such as urine, saliva, feces, vomit and semen) of an infected person or by being exposed to objects that have been contaminated with infected blood or body fluids. The incubation period is usually 8–10 days (rarely ranging from 2 to 21 days). Patients can transmit the virus once symptoms appear and through the later stages of disease, as well as postmortem.

U.S. hospitals can safely manage a patient with EVD by using all recommended isolation and infection control procedures. Standard, contact, and droplet precautions are recommended for management of hospitalized patients with known or suspected EVD. Similarly, U.S. clinical laboratories can safely handle specimens from these patients by strict adherence to precautions and practices specifically designed for bloodborne pathogens in the laboratory environment. However, Ebola has an apparent low infectious dose, the potential of high virus titers in the blood of ill patients, and can result in severe disease. Therefore, it is essential that laboratorians, supervisors, and other workers review laboratory safety procedures and guidelines to make sure to follow these biosafety recommendations. Following these guidelines U.S. hospitals and clinical laboratories have safely managed a number of VHF patients including cases of Lassa fever and Marburg virus (a closely related virus to Ebola).

***Potentially infectious diagnostic specimens are routinely handled and tested in U.S. laboratories in a safe manner, by closely following the standard safety precautions below.***

**All laboratorians and other healthcare personnel collecting or handling specimens must follow established standards compliant with the OSHA**

**bloodborne pathogens standard, which includes blood and other potentially infectious materials. These standards include wearing appropriate personal protective equipment (PPE) and following all safety rules for all specimens regardless of whether they are identified as being infectious.**

**Recommendations for risk assessment to staff:** Risk assessments should be conducted by each laboratory director, biosafety officer, or other responsible personnel to determine the potential for sprays, splashes, or aerosols generated from laboratory procedures. They should adjust, as needed, PPE requirements, practices, and safety equipment controls to protect the laboratorian's skin, eyes, and mucous membranes.

**Recommendations for specimen collection by staff:** Any person collecting specimens from a patient with a case of suspected Ebola virus disease should wear gloves, water-resistant gowns, full face shield or goggles, and masks to cover all of nose and mouth. Additional PPE may be required in certain situations.

**Recommendations for laboratory testing by staff:** Any person testing specimens from a patient with a suspected case of Ebola virus disease should wear gloves, water-resistant gowns, full face shield or goggles, and masks to cover all of nose and mouth, and as an added precaution use a certified class II Biosafety cabinet or Plexiglass splash guard with PPE to protect skin and mucous membranes. All manufacturer-installed safety features for laboratory instruments should be used.

## Specimen Handling for Routine Laboratory Testing (not for Ebola Diagnosis)

Routine laboratory testing includes traditional chemistry, hematology, and other laboratory testing used to support and treat patients. Precautions as described above offer appropriate protection for healthcare personnel performing laboratory testing on specimens from patients with suspected infection with Ebola virus. These precautions include both manufacturer installed safety features for instruments and the laboratory environment as well as PPE specified above.

## Environmental Cleaning and Disinfection

See the Interim Guidance for Environmental Infection Control in Hospitals for Ebola Virus (http://www.cdc.gov/vhf/ebola/hcp/environmental-infection-control-in-hospitals.html) for recommendations regarding the cleaning and disinfection of patient care area surfaces including the management of blood and body fluid spills. These recommendations also apply to cleaning and disinfecting in a laboratory where specimens are being processed from persons under investigation, or with probable or confirmed Ebola virus infections.

In the case of a spill in the laboratory, the basic principles for blood or body substance spill management are outlined in the United States OSHA Blood Borne Pathogens Standards. There are no disinfection products with specific label claims against the Ebola virus. Enveloped viruses such as Ebola are susceptible to a broad range of hospital disinfectants used to disinfect hard, non-porous surfaces. In contrast, non-enveloped viruses are more resistant to disinfectants. As an added precaution, use a

disinfectant with a higher potency than what is normally required for an enveloped virus to disinfect potentially Ebola-contaminated surfaces. EPA-registered hospital disinfectants with label claims against non-enveloped viruses (e.g., norovirus, rotavirus, adenovirus, poliovirus) are broadly antiviral and capable of inactivating both enveloped and non-enveloped viruses.

## Management of Laboratory Waste

Waste generated during laboratory testing should be placed in leak-proof containment and discarded as regulated medical waste. To minimize contamination of the exterior of the waste bag, place this bag in a rigid waste container designed for this use. If available, steam sterilization (autoclave) or incineration as a waste treatment process can inactivate the virus and reduces waste volume. For equipment that drains directly into the sewer system, the United States sanitary sewer system handling processes (e.g., anaerobic digestion, composting, disinfection) are designed to safely inactivate infectious agents.

## CDC Division of Select Agents and Toxins (DSAT) Considerations

If these guidelines for the collection, transport, and testing of specimens from suspected or confirmed Ebola patients are followed, waste generated during the handling and testing of such specimens and which is properly disposed would not be subject to Federal select agent regulations (See the exclusion provision 42 CFR § 73.3(d)(1)). However, this exclusion would not apply to any facility or laboratory that intentionally collected or otherwise extracted the Ebola virus from waste generated during the delivery of patient care.

## Transporting Specimens within the Hospital / Institution

In compliance with 29 CFR 1910.1030, specimens should be placed in a durable, leak-proof secondary container for transport within a facility. To reduce the risk of breakage or leaks, do not use any pneumatic tube system for transporting suspected EVD specimens.

## Packaging and Shipping Clinical Specimens to CDC

Specimens collected for EVD testing should be packaged and shipped without attempting to open collection tubes or aliquot specimens.

Hospitals are **REQUIRED** to contact the Office of Public Health Infectious Disease Epidemiology Section On-Call number at 1-800-256-2748 if EVD is suspected. If it is determined in consult with ID Epi that the specimen meets the requirements for Ebola testing, CDC must be contacted for consultation before a specimen can be submitted.

After OPH ID Epi's consultation with CDC, if testing is still warranted, the following steps should be used by your facility in submitting samples to CDC:

- Email tracking number to **EOCEVENT246@CDC.GOV**.
- Do not ship for weekend delivery unless instructed by CDC.

- Ship to:

  **Centers for Disease Control and Prevention**
  ATTN STAT LAB: VSPB, UNIT #70
  1600 Clifton Road NE
  Atlanta, GA 30333
  Phone 770-488-7100
- Include the following information: your name, the patient's name, test(s) requested, date of collection, laboratory or accession number, and the type of specimen being shipped.
- Include the CDC Infectious Disease **(CDC Form 50.34**) and **Viral Special Pathogens Branch** specimen submission forms.
- On the **outside** of the box, specify how the specimen should be stored: **refrigerated**.

Specimens for shipment should be packaged following the basic triple packaging system which consists of a primary container (a sealable specimen bag) wrapped with absorbent material, secondary container (watertight, leak-proof), and an outer shipping package. All applicable requirements of the U.S. Hazardous Materials Regulations (HMR) issued by the U.S. Department of Transportation (U.S. DOT) can be found on the DOT website. For questions on (packaging) transportation regulations, contact the U.S. DOT HazMat Information Center at 1-800-467-4922.

**Insulated Infectious Disease shippers are available for purchase through commercial vendors such as Fisher Scientific, VWR, Saf T Pak, etc.**

## Occupational Health

Potential exposures to blood, body fluids and other infectious materials must be reported immediately according to your institution's policies and procedures.

## When to Contact CDC

CDC highly recommends contacting your state and/or local health department *before* contacting CDC.

CDC is available for consultation 24/7 at 770-488-7100.

CDC will continue to evaluate new information as it becomes available and will update this guidance as needed.

If there are any questions, please do not hesitate to contact the OPH Laboratory: Kerri Gerage (225-219-5234, kerri.gerage@la.gov), Danielle Haydel (225-219-5263, danielle.haydel@la.gov), Lab 24 hr cell at 504-458-9537 or OPH Infectious Disease Epidemiology: On-Call phone at 1-800-256-2748, Julie Hand (504-568-8298, julie.hand@la.gov), Jenna Iberg Johnson (504-568-8312, jenna.ibergjohnson@la.gov).

INTERIM GUIDANCE FOR

# Specimen Collection, Transport, Testing, and Submission for Patients with Suspected Infection with Ebola Virus Disease

## NOTIFICATION & CONSULTATION

**Hospitals should follow** their state and/or local health department procedures for notification and consultation for Ebola testing requests before contacting CDC.

**CDC cannot accept any specimens without prior consultation.**

FOR CONSULTATION, CALL THE CDC EMERGENCY OPERATIONS CENTER AT

**770-488-7100**

## WHEN SPECIMENS SHOULD BE COLLECTED FOR EBOLA TESTING

**Ebola virus is detected in blood** only after the onset of symptoms, usually fever. It may take up to 3 days after symptoms appear for the virus to reach detectable levels. Virus is generally detectable by real-time RT-PCR from 3-10 days after symptoms appear.

3 days

**Ideally, specimens should be taken** when a symptomatic patient reports to a healthcare facility and is suspected of having an Ebola exposure. However, if the onset of symptoms is <3 days, a later specimen may be needed to completely rule-out Ebola virus, if the first specimen tests negative.

## PREFERRED SPECIMENS FOR EBOLA TESTING

**A minimum volume of 4 milliliters** of whole blood preserved with EDTA is preferred but whole blood preserved with sodium polyanethol sulfonate (SPS), citrate, or with clot activator can be submitted for Ebola testing.

**Specimens should be shipped** at 2-8°C or frozen on cold-packs to CDC. Do not submit specimens to CDC in glass containers. Do not submit specimens preserved in heparin tubes.

2-8°C

**Specimens other than blood** may be submitted upon consult with CDC.

**Standard labeling should be applied** for each specimen. The requested test needs to be identified only on the requisition and CDC specimen submission forms.

## DIAGNOSTIC TESTING FOR EBOLA PERFORMED AT CDC

**Several diagnostic tests are available** for detection of Ebola virus disease. Acute infections will be confirmed using a real-time RT-PCR assay (CDC test directory code CDC -10309 Ebola Identification) in a CLIA-accredited laboratory. Virus isolation may also be attempted. Serologic testing for IgM and IgG antibodies will be completed for certain specimens and to monitor the immune response in confirmed Ebola virus disease patients (#CDC-10310 Ebola Serology).

**Lassa fever is also endemic** in certain areas of West Africa and may show symptoms similar to early Ebola virus disease. Diagnostic tests available at CDC include but are not limited to RT-PCR, antigen detection, and IgM serology, all of which may be utilized to rule out Lassa fever in patients who test negative for Ebola virus disease.

## TRANSPORTING SPECIMENS WITHIN THE HOSPITAL / INSTITUTION

**In compliance with 29 CFR 1910.1030**, specimens should be placed in a durable, leak-proof secondary container for transport within a facility. To reduce the risk of breakage or leaks, do not use any pneumatic tube system for transporting suspected Ebola virus disease specimens.

## PACKAGING & SHIPPING CLINICAL SPECIMENS TO CDC

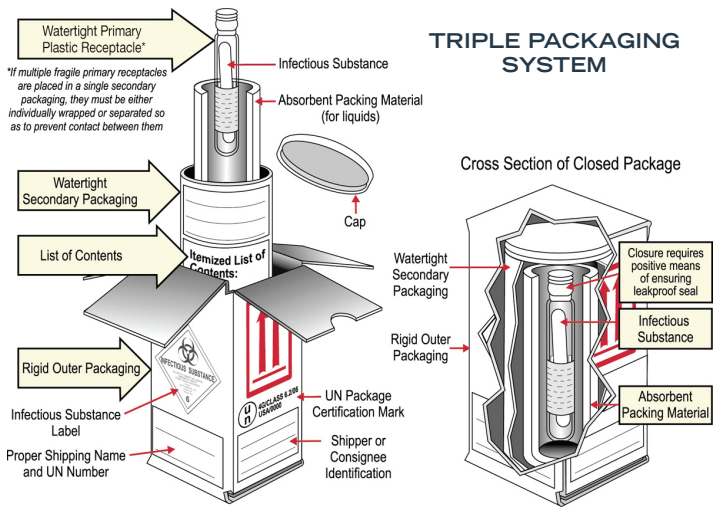


**Specimens collected for Ebola** virus disease testing should be packaged and shipped without attempting to open collection tubes or aliquot specimens.

**Specimens for shipment** should be packaged following the basic triple packaging system which consists of a primary container (a sealable specimen bag) wrapped with absorbent material, secondary container (watertight, leak-proof), and an outer shipping package.

## THE SUBMISSION PROCESS

**Contact** your state and/or local health department and CDC (770-488-7100) to determine the proper category for shipment based on clinical history and risk assessment by CDC and to obtain detailed shipping guidance and required CDC submission documents. State guidelines may differ and state or local health departments should be consulted before shipping.

INFORMATION ON SHIPPING & TRACKING IS AVAILABLE AT

**www.cdc.gov/ebola**